Paper Board Sign

Snap open design free standing paper holder, Paper Board Sign Holder is provided with two clear clips for each paper. It is practical to change the poster when the message is changed. Heavy rubberised base keeps Paper Board Sign Holder stable. One product can present 4 x (8.5" X 11") letter size. It features complete Black finish which differentiates Paper Board Sign Holder from many others.

Indoor use.

Complete with anti-reflex PET cover.

3 packs. See info chart for pack sizes.

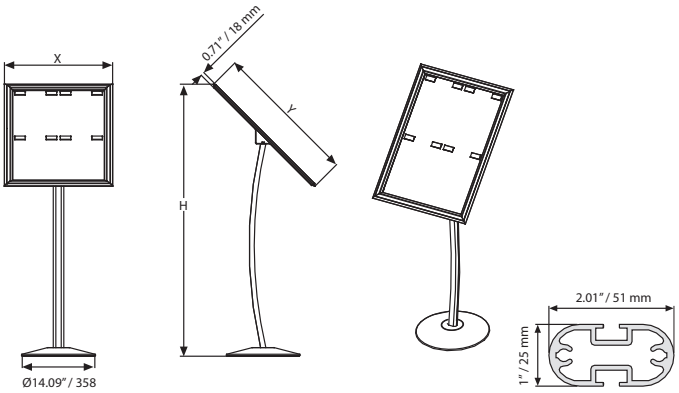

MATERIAL : Silver & Black anodised aluminium				
ARTICLE	EXTERNAL (x-y)	PAPER AREA	CAPACITY	HEIGHT
UCUP0B0481	20.55" X 27.32"	17.40" X 24.17"	4 X (8.5" X 11")	51.57"

WEIGHT	PACKING SIZE
WITH PACKING	*W X H X D
23.148 lbs	2.36" X 41.73" X 3.62"
	19.29" X 19.29" X 0.20"
	23.23" X 29.92" X 2.36"

* W:Width H: Height D: Depth

M&T Displays

3 YEAR WARRANTY